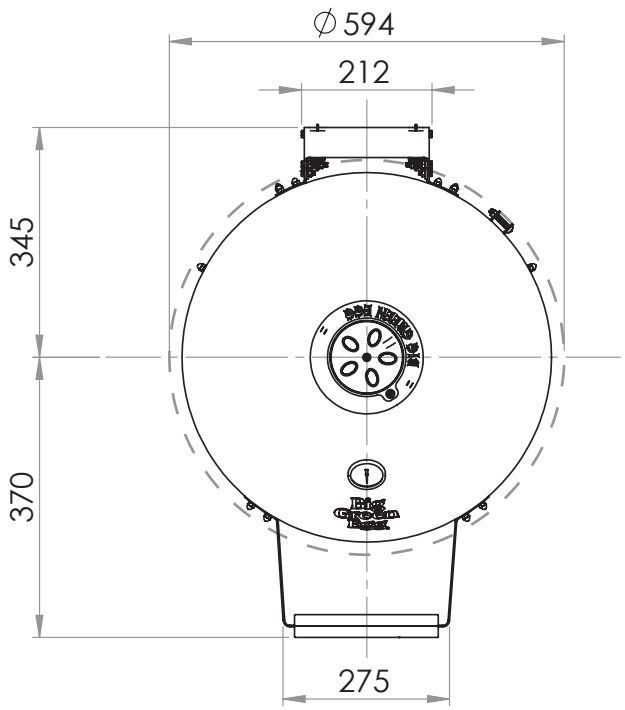

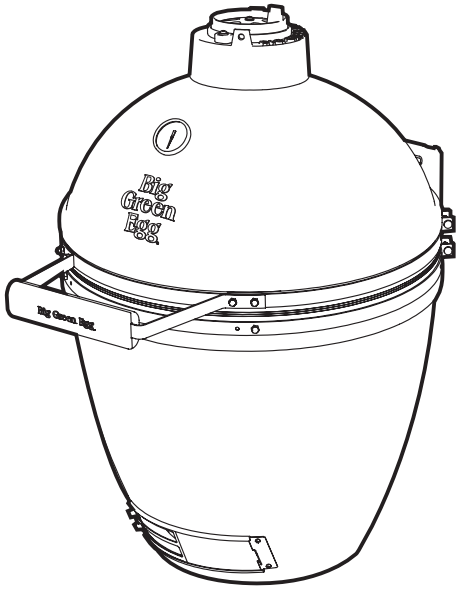

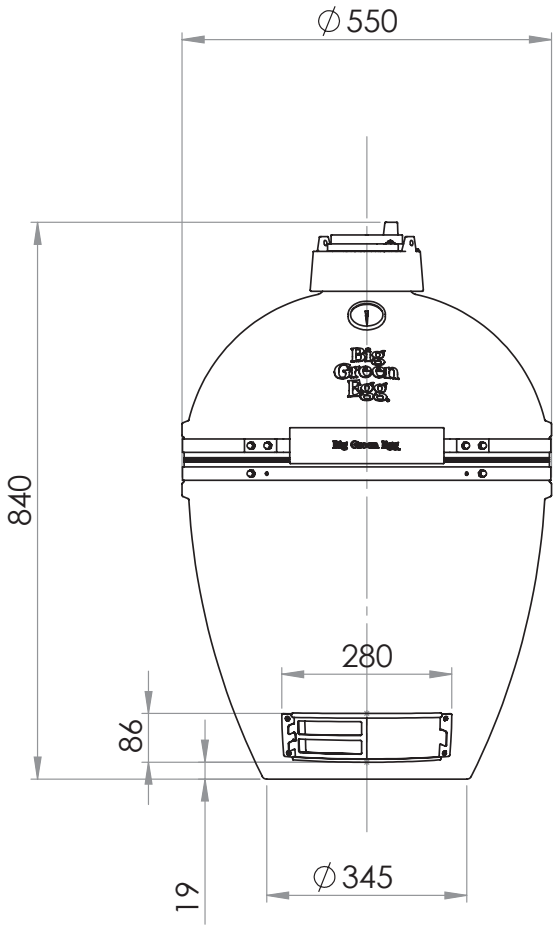

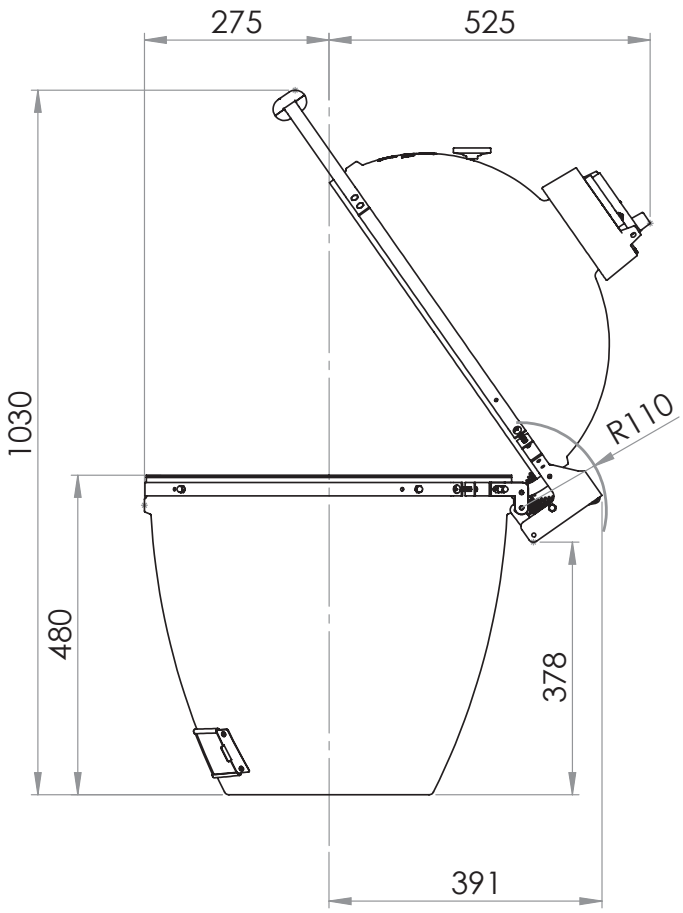

L

mm

70 kg

Big Green Egg
The Ultimate Cooking Experience™